Brüel & Kjær Vibro

A member of the NSK Group

Instruction

8315

Acceleration sensors

CE

Keep accessible for future reference

Copyright © 2022 Brüel & Kjær Vibro GmbH

All rights to this technical documentation remain reserved.
Any corporeal or incorporeal reproduction or dissemination of this technical documentation or making this document available to the public without prior written approval from Brüel & Kjær Vibro GmbH shall be prohibited. This also applies to parts of this technical documentation.

Instruction **Sensor 8315**, C105519.002 / V04, en, date of issue: 10.01.2022

Brüel & Kjær Vibro GmbH
Leydheckerstrasse. 10
64293 Darmstadt
Germany

Phone: +49 6151 428 0
Fax: +49 6151 428 1000

Brüel & Kjær Vibro A/S
Lyngby Hovedgade 94, 5 sal
2800 Lyngby
Denmark

Phone: +45 69 89 03 00
Fax: ++45 69 89 03 01

BK Vibro America Inc
1100 Mark Circle
Gardnerville NV 89410
USA

Phone: +1 (775) 552 3110

Hotline

Phone: +49 6151 428 1400
E-Mail: support@bkvibro.com

Homepage

www.bkvibro.com

Corporate E-Mail

info@bkvibro.com

Table of Contents

1 Hint 4
1.1 Pictograms and their Meanings 4
1.2 User Qualification 4
1.3 Intended Use 5
1.3.1 Recommendations to User 5
1.3.2 Prohibition of Unauthorized Modifications 5

2 Application 6
3 Measuring Principle 6
4 Mounting 6
4.1 Coupling 6
4.2 Required Mounting Space 7
4.3 Mounting template 7
4.4 Measuring direction 8
4.5 Polarity 8
4.6 Connection cable 9
4.7 Installation 10
4.7.1 Connection 11

5 Maintenance and repair 11
6 Disposal 11
7 Technical Data 12
8 CE Declaration 17

UNRESTRICTED DOCUMENT

1 Hint

Figure 1-1) Acceleration sensor 8315

NOTE!

This manual is a part of the product. Read the manual carefully before using the product and keep it accessible for future use.

1.1 Pictograms and their Meanings

This symbol warns of dangerous situations which can result from misuse of the product.

1.2 User Qualification

Ensure that all work in conjunction with our systems is performed by skilled, expert and authorized workers (for ATEX systems according to EN 60079-14). Among these works are:

Installation and Commissioning

Installation and commissioning primarily concern work on electrical equipment. These works may be performed exclusively by electricians or workers instructed and supervised by an electrician in accordance with electrotechnical regulations/directives.

Change of System Specification

Any change of system specification has its effects on monitoring process with stationary systems and on the measuring sequence with portable measuring systems.

© Brüel & Kjær Vibro ● C105519.002 / V04
Technical alterations reserved!

1.3 Intended Use

If sensors and cables are used in a way not described in the relevant user manuals, function and protection may be impaired and serious personal damage, death or serious, irreversible injuries may result.

- Exclusively use sensor as specified in data sheet. Any use other than specified is considered inappropriate. Brüel & Kjær Vibro does not assume any liability for damages resulting from inappropriate use. The user is solely responsible.
- Mounted sensors must not be used as steps.
- Ensure that system is exposed only to admissible environmental influences specified in technical system data sheet.
- Maintain electrical equipment in regular intervals. Remedy defects, e.g. loose wires, defective connectors, immediately.

Hot surfaces

- In line with the user manuals, sensors and cables can be operated in extensive ambient temperature ranges, whereby they can become hot through self-heating on housing walls and can produce burning.
- When mounted at external heat or cold sources (e.g. machine parts), systems, sensors and cables can adopt dangerous temperatures, whereby burning, among other things, can occur in the event of contact.

1.3.1 Recommendations to User

If the use of the system in conjunction with machines or plant sections can produce risks outside of Brüel & Kjær Vibro's responsibility, the user is expected to prepare and distribute safety technical instructions or warnings and to ensure that the personnel concerned has received and understood it.

If system is integrated into a machine or designed to be assembled, commissioning must not take place until the machine the system is to be integrated in conforms to the EC directives.

1.3.2 Prohibition of Unauthorized Modifications

System and accessories must not be changed neither in construction nor safety technology without the express consent of Brüel & Kjær Vibro. Any unauthorized modification excludes Brüel & Kjær Vibro's liability for resulting damages.

UNRESTRICTED DOCUMENT

2 Application

The sensor 8315 is an uni-axial charge type acceleration sensor. In connection with the external charge amplifier 2661 it is used for the measurement of vibration acceleration on rotating machinery like turbines, pumps, compressors, etc.

3 Measuring Principle

The 8315 acceleration sensors are working according to the piezoelectric shear principle. Inside the sensor, a piezo ceramic and an internal seismic mass form an oscillatory spring-mass damping system. As soon as vibrations are induced into the system, the mass exerts a changing force onto the ceramic. Due to the piezo effect, electric charges occur, which are proportional to the acceleration.

4 Mounting

4.1 Coupling

General rule:
The weight of the acceleration sensor should always be lower at least by a factor ten than the weight of the object onto which it is mounted.
The acceleration sensor is an additional mass, which loads the object on which it is mounted, and this changes the vibration behaviour if it is too large. The sensor requires a friction-locked, contact resonance-free, rigid mounting to the object, particularly for measurements at high frequencies.

© Brüel & Kjær Vibro ● C105519.002 / V04
Technical alterations reserved!

4.2 Required Mounting Space

Minimum bending radius (R):	39 mm
Accelerometer height with integrated cable (C):	70 mm
The mounting space can be calculated as	$X_{min} = C + R$

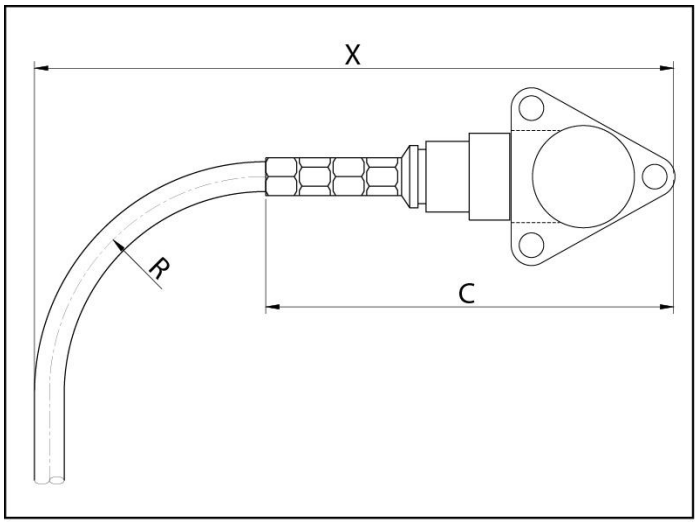

Figure 4-1) *Required Mounting Space*

4.3 Mounting template

The sensor has an ARINC footprint. A mounting template is part of the delivery extent.

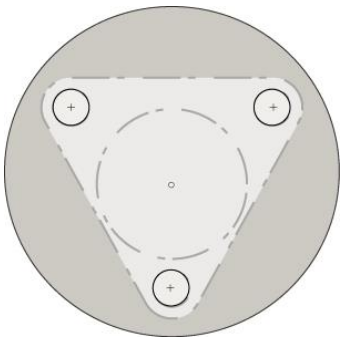

Figure 4-2) *ARINC Mounting template*

UNRESTRICTED DOCUMENT

4.4 Measuring direction

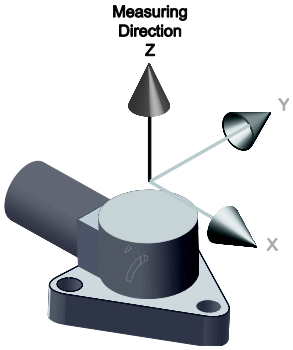

Figure 4-3) Measuring direction

There are no limits to the measuring direction. The sensor can be used in any mounting position.

4.5 Polarity

Acceleration of the sensor into the basis in direction of the Z-axis results in a positive signal on the gray signal wire or left signal pin.

© Brüel & Kjær Vibro ● C105519.002 / V04
Technical alterations reserved!

4.6 Connection cable

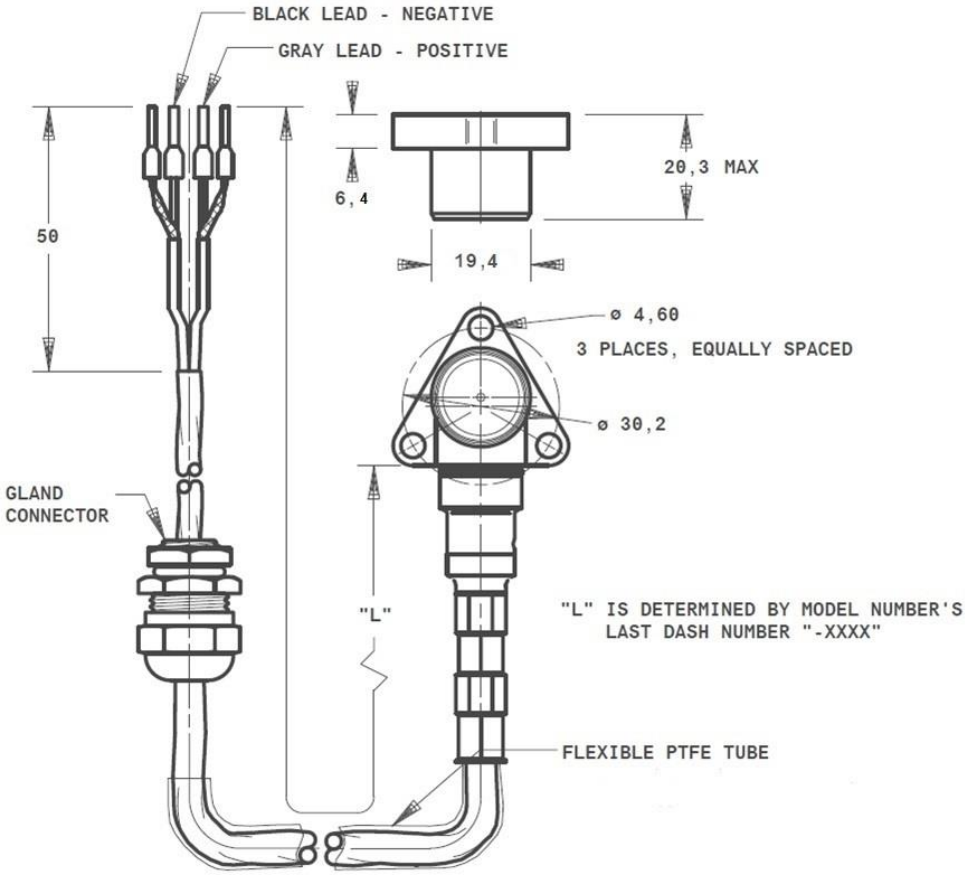

Figure 4-4) Sensor with integrated cable

- Structure: .... 2-wire, stranded + sheath
- Wire insulation: .... PTFE
- Braid..... ....stainless steel
- Sheath insulation: .... PFA
- Outside diameter: .... 5,8 mm
- Number of leads: 2
- Conductor cross-section:..... .... 0,051 mm²

UNRESTRICTED DOCUMENT

4.7 Installation

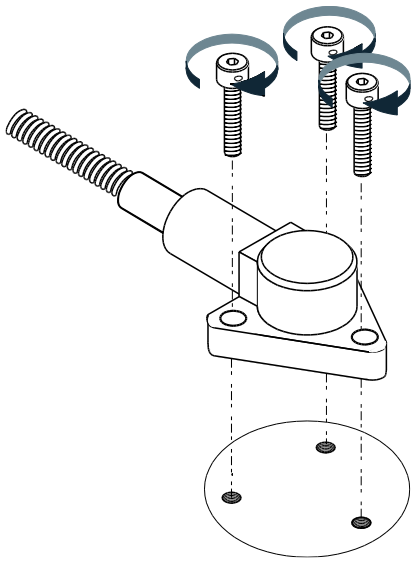

Figure 4-5) Assembly

1. Prepare the mounting surface in the area of the sensor machined flat (Mounting surface 0.8).
2. Provide a size M4, 3 threaded holes 10 mm deep in the surface of the machine according to mounting template.
3. The hole must be machined – flat mounting surface!
4. Apply a thin film of silicone grease on the mounting surface to prevent contact resonance.
5. Secure screws (e.g. with LOCTITE 243 medium strength, or LOCTITE 270 high strength).
6. The sensor has to be fixed with the enclosed three M4 screws.
   Tightening Torque: 2.9 Nm.
7. Optional the screws can be fixed by a wire through the safety holes of the screws.

A precondition for operational safety is *correct* installation. It protects the sensor against:

- Mechanical damages (e.g. caused by pinching of the line)
- damages at the line caused by vibration
- Protection from electrostatic charge of the cable
- Environmental influences (e.g. humidity).

Lines and protective tubes

The sensor line as well as possible extension lines have to be protected both electrically and mechanically. Please take the local conditions into account when doing so.

© Brüel & Kjær Vibro ● C105519.002 / V04
Technical alterations reserved!

Marking of lines

It is very important to mark the line from the point of measurement to the connection of the electronic super-vision system. It is indispensable for documentation, initiation and for the service departments and has to be done by the customer.

4.7.1 Connection

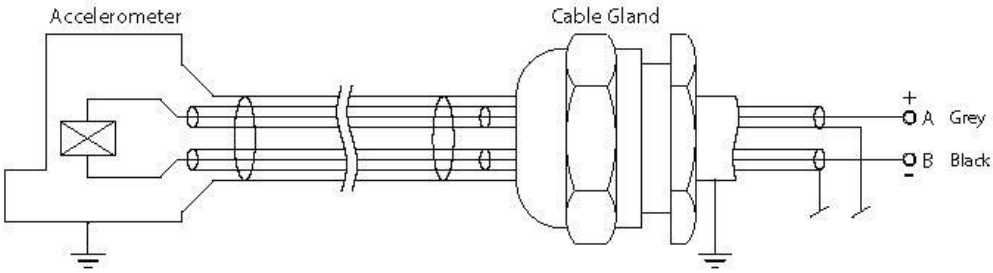

Figure 4-6) Connection 8315

5 Maintenance and repair

All sensors of the 8315 series are maintenance-free.

Never open a defective sensor! It has to be replaced in case of damage. Should a defect occur at the power supply lead, the sensor has to be replaced immediately.

6 Disposal

After use, dispose of the systems, cables and sensors in an environmentally friendly manner, in accordance with the applicable national provisions.

WEEE-Reg.-Nr. DE 69572330

UNRESTRICTED DOCUMENT

7 Technical Data

Features

10 pC/ms-²
General purpose
Side cable outlet
High temperature up to 260 °C

Applications

The sensor 8315 is an uni-axial charge type acceleration sensor.

Product description

Scope of delivery:

- Sensor 8315
- 1x Hex key
- 3x Hexagon socket head cap screws M4 x 0,7 length 12 mm
- Mounting template
- Documentation

Connection

Plug connection
Pin A: + (grey)
Pin B: - (black)

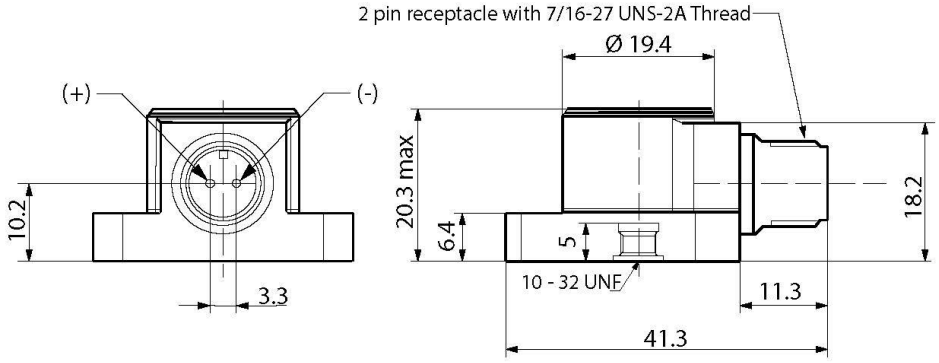

length in [mm]

© Brüel & Kjær Vibro ● C105519.002 / V04
Technical alterations reserved!

Dynamic	
Sensitivity at 159,15 Hz:	10 pC/ms^{-2} ± 5 %
Resonance frequency:	>28 kHz
Measuring range:	±2 000 ms^{-2} $_{Peak}$
Frequency response of 8315-S:	±10%: 1 Hz … 10 kHz

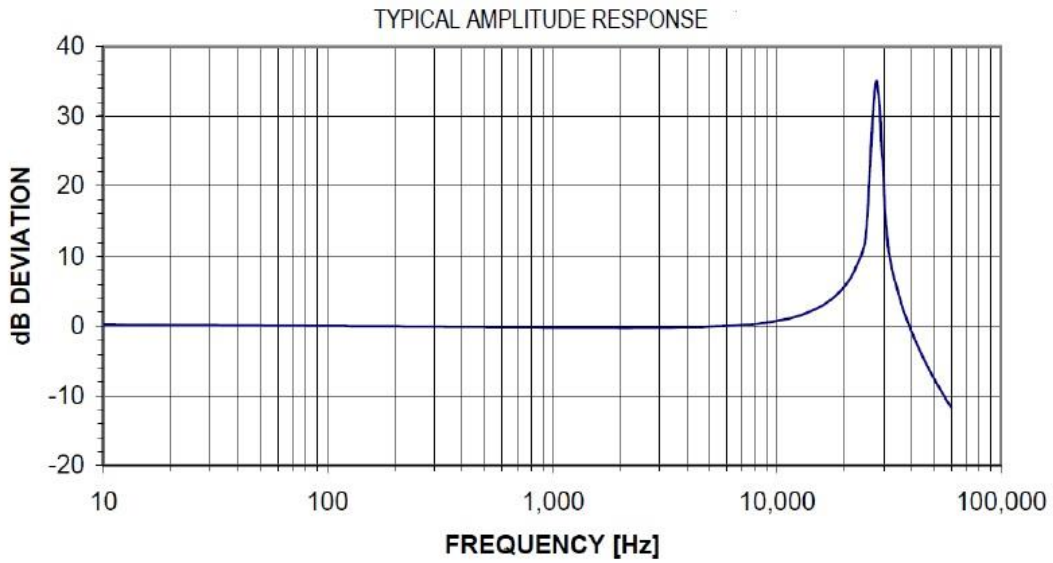

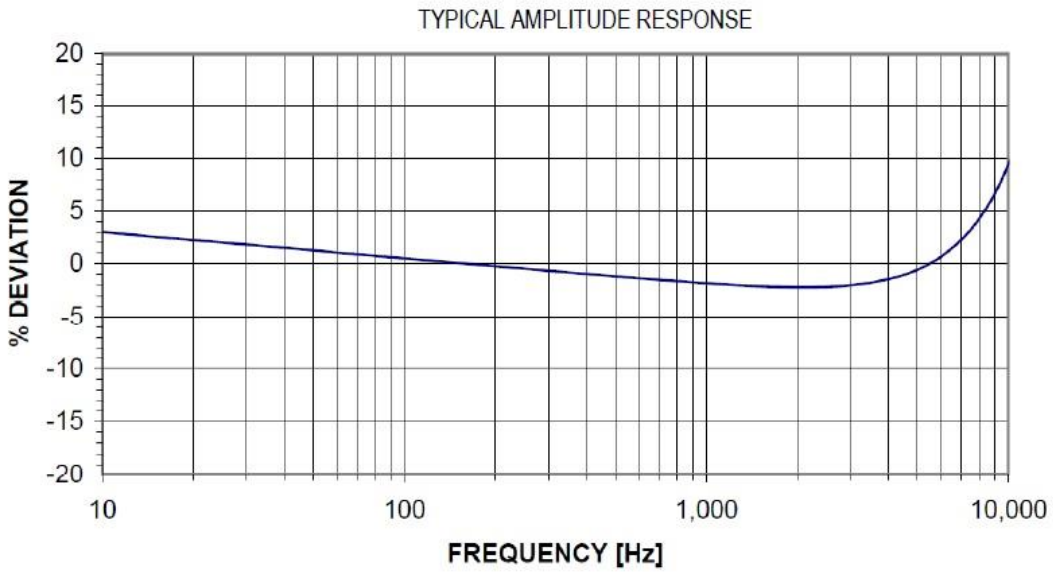

Figure 7-1) *Frequency response* 8315

UNRESTRICTED DOCUMENT

Transverse sensitivity:	<4%
Amplitude linearity:	>1% increase per 2 000 ms^{-2}
Thermal sensitivity shift, typical:	±10% (-53 °C … +125 °C)

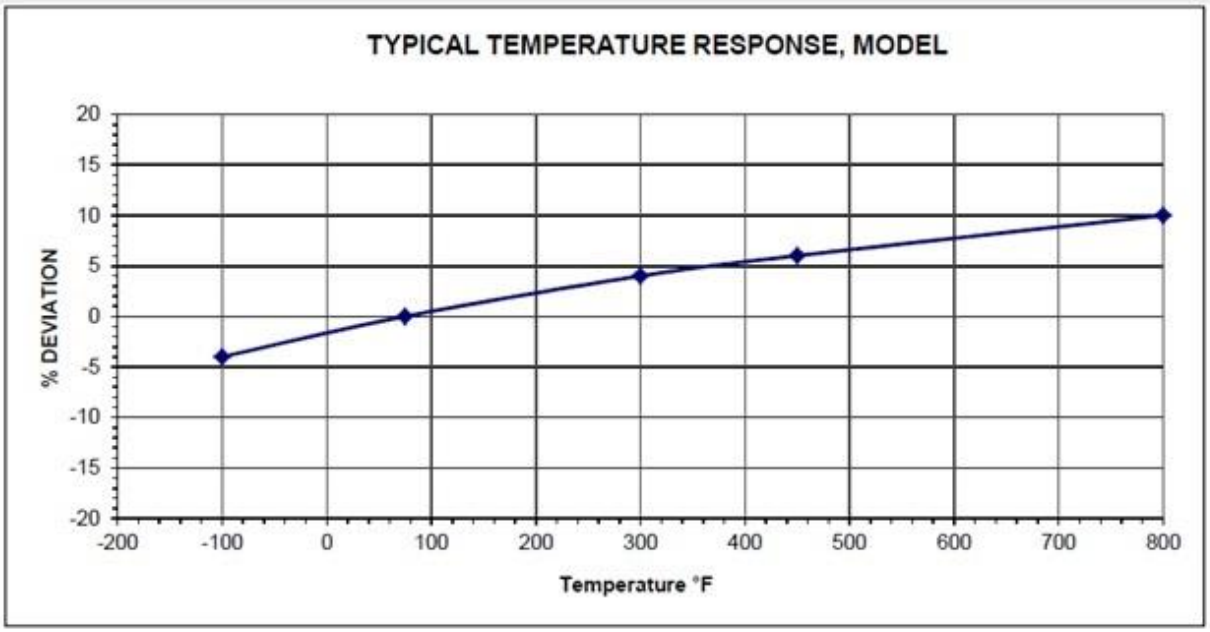

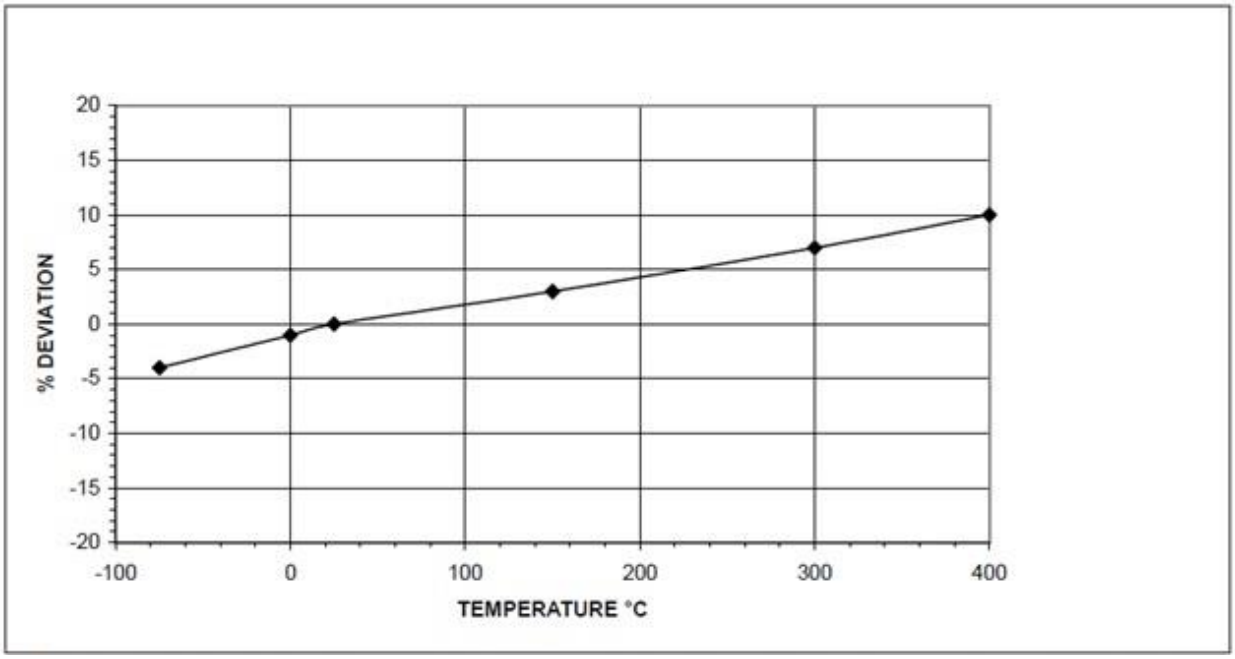

Figure 7-2) *Typical temperature response 8315*

© Brüel & Kjær Vibro ● C105519.002 / V04
Technical alterations reserved!

Electric	
Resistance, typical	
Between signal pins (+25 °C):	≥ 10 GΩ
Each signal pin to case (+25 °C):	≥ 10 GΩ
Capacity, typical	
Between signal pins (excluding cable):	12,2 nF
Either signal lead to case:	<30 pF
Unbalanced between pins:	<2 pF

Environmental:	
Overload capacity (peak):	
Shock limit (1ms half sine):	± 10 000 ms^{-2}_{peak}
Sinusoidal vibration limit:	± 5 000 ms^{-2}_{peak}
Base strain sensitivity, typical:	0,008 ms^{-2} / με
Electromagnetic sensitivity, typical 60 Hz, 0,03 T:	24 ms^{-2}/T
Temperature transient sensitivity typical, measured with 1 Hz high pass filter:	0,09 ms^{-2}/°C

Physical values	
Sensing element:	Ceramic
Sensing geometry:	Shear
Weight (without cable):	~ 91 g
Case material:	316L

UNRESTRICTED DOCUMENT

Order code

8315 –x –x –xx –x –xxxx

Version:
S: Standard

Cable integration:
0: No integration
1: Integrated
4: Integration with tubing (PTFE)

Cable type:
01: double screened

Integration at cable end:
A: Open end

Cable length:
0030: 3 meters
0050: 5 meters
0100: 10 meters
0150: 15 meters
0200: 20 meters
0250: 25 meters
0350: 35 meters
0500: 50 meters

© Brüel & Kjær Vibro ● C105519.002 / V04
Technical alterations reserved!

8 CE Declaration

Brüel & Kjær Vibro

EU-Konformitätserklärung / *EU- Declaration of conformity*

Hiermit bescheinigt das Unternehmen / *The company*

Brüel & Kjær Vibro GmbH
Leydheckerstraße 10
D-64293 Darmstadt

CE

die Konformität des Produkts / *herewith declares conformity of the product*

Beschleunigungs-Sensor / *Acceleration Sensor*

Typ / *Type*

8315

mit folgenden einschlägigen Bestimmungen / *with applicable regulations below*
EU-Richtlinie / *EU-directive*

2014/30/EU EMV-Richtlinie / *EMC-Directive*

2011/65/EU Richtlinie zur Beschränkung der Verwendung bestimmter gefährlicher Stoffe in Elektro- und Elektronikgeräten/ *EU Directive for the restriction of the use of certain hazardous substances in electrical and electronic equipment*

Angewendete harmonisierte Normen / *Harmonized standards applied*

EN 61326-1: 2013
EN 50581 : 2012

Bereich / Division
Brüel & Kjær Vibro GmbH

Unterschrift / Signature
CE-Beauftragter / *CE-Coordinator*

i.A.
(Niels Karg)

Ort/*Place* **Darmstadt**
Datum / *Date* **25.02.2020**

CORPORATE DOCUMENT

UNRESTRICTED DOCUMENT

Contact

Brüel & Kjær Vibro GmbH
Leydheckerstrasse 10
64293 Darmstadt
Germany

Phone: +49 6151 428 0
Fax: +49 6151 428 1000

Brüel & Kjær Vibro A/S
Lyngby Hovedgade 94, 5 sal
2800 Lyngby
Denmark

Phone: +45 69 89 03 00
Fax: ++45 69 89 03 01

BK Vibro America Inc
1100 Mark Circle
Gardnerville NV 89410
USA

Phone: +1 (775) 552 3110

Corporate E-Mail: info@bkvibro.com

Homepage: www.bkvibro.com

Sensor 8315 ● © Brüel & Kjær Vibro ● 01/2022 ● C105519.002 / V04 ●
Technical alterations reserved!