Brüel & Kjær Vibro

Instruction

VIBROCONTROL 850

Single channel vibration monitor

Keep it accessible for future reference.

Copyright © 2017 Brüel & Kjaer Vibro GmbH
All rights to this technical documentation remain reserved.
Any corporeal or incorporeal reproduction or dissemination of this technical documentation or making this document available to the public without prior written approval from Brüel & Kjaer Vibro GmbH shall be prohibited. This also applies to parts of this technical documentation.

Brüel & Kjaer Vibro GmbH
Leydheckerstrasse 10
64293 Darmstadt
Germany

Phone: +49 6151 428-0
Fax: +49 6151 428-1000
E-Mail: info@bkvibro.com

Hotline:

Phone: +49 6151 428-1400

E-Mail: support@bkvibro.com

Content

1 Applications 4

2 Hints for safety operations of VIBROCONTROL 850 4

3 Functionality 5

3.1 DIP-switches 6

3.2 How to get access to the set-up DIP-switches 6

3.3 Measuring Parameter (mm/s) 7

3.4 Measuring Range Full Scale 7

3.5 Frequency Bandwidth 7

3.6 Alert Alarm Trigger Level 7

3.7 Alert Alarm Delay Time 8

3.9 Danger Alarm Trigger Level 9

3.10 Danger Alarm Delay Time 9

3.11 Vibration Level During Self-Test 10

3.13 System Failure 11

3.14 Hang Time 11

3.15 Latch Function 11

3.16 Overload 11

3.17 Over range 12

3.18 DC Analogue Output 12

3.19 Alarm Output (relays) 12

3.20 Light Emitting Diodes (LEDs) 13

3.21 Self-Test Function 13

3.22 Sensor Test 13

3.23 Measuring Direction 14

3.24 Reset of Alarms 14

3.25 Inhibit Alarms 14

3.26 Grounding the housing of the device 14

4 Mounting of the VIBROCONTROL 850 15

5 Cable Connections 16

5.1 Standard Cable Configuration 16

6 Technical data 17

7 Maintenance 19

8 Disposal 19

WARNING!

This symbol warns of dangerous situations which can result from misuse of the product.

NOTE!

This symbol provides general and useful information for using the product.

1 Applications

The VIBROCONTROL 850 is a maintenance free device and can be used to monitor vibration parameters in applications with machines like pumps, blowers, ventilators, decanters, separators, centrifuges, mills and milling equipment.

In case the VIBROCONTROL 850 needs to have removed the lid for change of settings, make sure that the O-ring is in place and not damaged.

The VIBROCONTROL 850 continuously keeps track of the vibration level of a machine at the point where it is fixed to that machine.
The vibration parameters are given in true RMS of the vibration signal in mm/s.
The VIBROCONTROL 850 has two alarms, respectively called Alert and Danger, which can be used to give alarm(s) if the machine vibration level exceeds certain pre-set trigger level(s).

2 Hints for safety operations of VIBROCONTROL 850

General:
Please carefully read the operating instructions prior to set-up of the device. Make sure that your VIBROCONTROL 850 is suitable for your application without any restrictions.

Improper use:
Any improper or non-intended use may lead to malfunctions of the VIBROCONTROL 850 or to unwanted effects in your application. If the VIBROCONTROL 850 is used in a way not described in the relevant user manuals, function and protection may be impaired and serious personal damage, death or serious, irreversible injuries may result.

EU-directives:
All versions of the VIBROCONTROL 850 conform to the relevant regulations and EC directives.

Installation and operation:
Installation, electrical connection, set-up, operation and maintenance of your VIBROCONTROL 850(s) must only be carried out by qualified/trained personnel (electrician) authorized by the machine operator in accordance with local- and national regulations for the installation of electrical equipment.

Changing the setup parameters:
Before applying a new set of setup parameters to the VIBROCONTROL 850, please make sure that doing so cannot cause any damage to persons and/or machinery.

© Brüel & Kjaer Vibro ● October 2017 ● C106635002 / V01
Technical alterations reserved!

Maintenance:
If used correctly no maintenance and repair measures are necessary. Only the manufacturer is allowed to repair the unit. At the end-of-life-cycle, please dispose of the unit in an environmentally friendly way in accordance with the applicable national regulations.

3 Functionality

The VIBROCONTROL 850 is a vibration monitor device with an internal accelerometer, as well as conditioning-, alarm-, test-, and output circuitries, all placed in a stainless steel enclosure. The internal accelerometer sensor has a maximum bandwidth of 10 – 1000 Hz.
The VIBROCONTROL 850 is designed to monitor mechanical vibrations on machines according to DIN/ISO-10816. In compliance with this standard the machine vibration must be monitored in mm/s and within a frequency bandwidth of 10 – 1000 Hz.
In the VIBROCONTROL 850 the momentary vibration level is continuously compared with two alarm trigger levels respectively called Alert and Danger. If an alarm trigger level has been exceeded, the corresponding alarm relay (respectively Danger Relay and/or Alert Relay) will become activated and thereby inform the user, e.g. via a connected rotor light, beeper, controller or by directly shutting down the machine.
The VIBROCONTROL 850 provides a 4-20 mA DC output signal, which at any time expresses the vibration level relative to the chosen measuring range.

Using DIP-switches that can be accessed – after the lid of the enclosure has been removed – the customer has the possibility to set a number of parameters.
See paragraph 3.2 how to remove the lid.

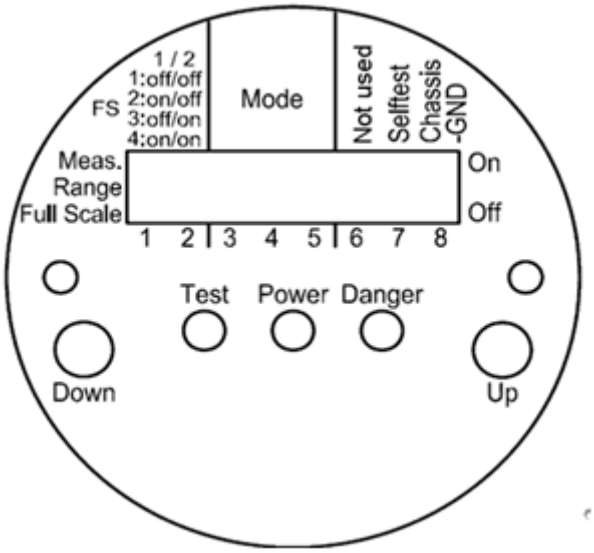

3.1 DIP-switches

There are 8 DIP-switches that are combined in three groups:

- Measurement range (DIP-switches #1 and #2):
  There are four possible measurement ranges with different full scale values that can be used when the VIBROCONTROL 850 is working in “Standard Mode”.
  The actual four (4) possible full scale values are set by the factory to default values.

- Mode (DIP-switches #3, #4 and #5):
  Under “Mode” the user has the possibility to setup alert and danger alarm trigger level, alert and danger delay time and the self-test level in standard mode. DIP-switch #6 must be in OFF position.

	Switch position			Parameter setting	Value range
	#3	#4	#5		
(0)	Off	Off	Off	Parameter setting mode inactive	None
(1)	Off	Off	On	Danger alarm delay time	1-100 s
(2)	Off	On	Off	Danger Alarm trigger level	1-100 % of FS
(3)	Off	On	On	Not applicable	None
(4)	On	Off	Off	Alert Alarm trigger level	1-100 % of FS
(5)	On	Off	On	Analogue output level during Self-Test	1-100 % of FS
(6)	On	On	Off	Alert Alarm delay time	1-100 s
(7)	On	On	On	Not applicable	None

- Miscellaneous (DIP-switches #6, #7 and #8):
  - - DIP-switch #6 not used
  - - DIP-switch #7 switches the Self-Test function On or Off (see section 3.20)
  - - DIP-switch #8 connects the enclosure to GND (see section 3.25).

3.2 How to get access to the set-up DIP-switches

If the need arises, the customer can change certain setup parameters by means of eight DIP-switches and two up/down pushbuttons.
In order to have access to the DIP-switches and pushbuttons the customer will have to carry out the following procedure:

1) Remove the lid, using a coin or a large screwdriver
2) Remove the lid and the sealing O-Ring

Do NOT commence the removal of the lid before the power has been switched off.

In case the VIBROCONTROL 850 needs to have removed the lid for change of settings, make sure that the O-ring is in place and not damaged.

© Brüel & Kjaer Vibro ● October 2017 ● C106635002 / V01
Technical alterations reserved!

3.3 Measuring Parameter (mm/s)

The VIBROCONTROL 850 will be delivered with velocity in mm/s as the default parameter according to ISO-10816, which is the most common standard related to machine vibration.

3.4 Measuring Range Full Scale

In manual mode the full scale of the measuring range is selectable by the customer using two DIP-switches (1 & 2) marked Meas. Range Full Scale.
Whenever the VIBROCONTROL 850 is setup to measure velocity in mm/s, the settings of DIP-switches 1 & 2 will have the following meaning by default 20 mm/s.

	#1	#2	Full Scale (FS) Range	Range in mm/s
(0)	Off	Off	FS 1	10
(1)	On	Off	FS 2	20
(2)	Off	On	FS 3	50
(3)	On	On	FS 4	100

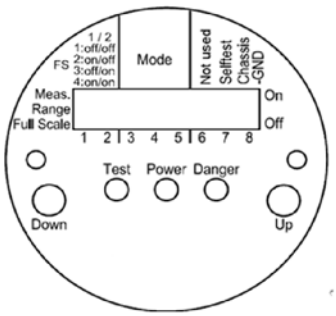

3.5 Frequency Bandwidth

The VIBROCONTROL 850 will be delivered with a frequency bandwidth of 10-1,000 Hz.

3.6 Alert Alarm Trigger Level

The Alert Alarm Trigger Level is the vibration threshold level that must be exceeded for at least the Alert alarm delay time for the Alert alarm to become activated.
By default the Alert alarm trigger level is set to be 35 % of full scale.
Alternatively the customer can set the Alert alarm trigger level to his/her likings by using the following procedure:

- Remove the lid that covers the VIBROCONTROL 850.
- Connect a digital multi meter in DC mA mode with a full-scale deflection of at least 20 mA to the wires “GND” (-) and “4-20 mA Output” (+).
- Set DIP-switches 3, 4 & 5 in position (On – Off – Off)
- If e.g. the Alert alarm trigger level is 50 % the multi meter will show an analogue output of 12.0 mA.
- The analogue output can be changed to any value between 1 % and 100 % of selected full scale by pushing the buttons up and down at the left and right bottom of the round plate. Each pushing of the respective button will decrease or increase the Alert alarm trigger level by 0.5 % of full scale. Stop pushing the buttons when the required Alert alarm trigger level has been reached. When one of the buttons is held down it will continuously change the Alert alarm trigger level.
- When finished put the DIP-switches 3, 4 & 5 into the position Off – Off – Off, which will bring the VIBROCONTROL 850 back into normal monitoring mode with the new settings in place.

Failing to put the DIP-switches 3, 4 & 5 in Off – Off – Off position after the setting is finished, will have the consequence that the analogue output will continuously be showing the Alert alarm trigger level and the vibration guard will therefore NO LONGER react on any alarm trigger levels, i.e. neither from Alert nor Danger alarms.

3.7 Alert Alarm Delay Time

The Alert Alarm Delay Time is the minimum time the vibration level must exceed the pre-set Alert alarm trigger level before the alarm gets activated. This is to avoid false alarms in situations where an allowed short-lived shock (transient) is imposed on the machine. This could be when e.g. a new piece of raw material is placed in or taken out of the machine.
The Alert alarm delay time is 3 seconds. The customer can set the Alert alarm delay time to the following procedure:

- Remove the lid that covers the VIBROCONTROL 850.
- Connect a digital multi meter in DC mA mode with a full-scale deflection of at least 20 mA to the wires “GND” (-) and “4-20 mA Output” (+).
- Set DIP-switches 3, 4 & 5 in position (On – On – Off).
- If e.g. the Alert alarm delay time is 10 seconds the multi meter will show an analogue output of 5.6 mA.
- The Alert alarm delay time can be changed to any value between 0 second and 100 seconds by pushing the buttons up and down at the left and right bottom of the round plate. 0 second is 4 mA and 100 seconds is 20 mA. Each pushing of the button will decrease or increase the Alert alarm delay time by half a second. When one of the buttons is held down it will continuously change the Alert Alarm Delay Time. Stop pushing the buttons when the required Alert Alarm Delay Time has been reached.
- When finished put the DIP-switches 3, 4 & 5 into the position Off – Off – Off, which will bring the VIBROCONTROL 850 back into normal monitoring mode with the new settings in place.

Failing to put the DIP-switches 3, 4 & 5 in Off – Off – Off position after the setting is finished, will have the consequence that the analogue output will continuously be showing the Alert alarm delay time and the vibration guard will therefore NO LONGER react on any alarm trigger levels, i.e. neither from Alert nor Danger alarms.

© Brüel & Kjaer Vibro ● October 2017 ● C106635002 / V01
Technical alterations reserved!

3.9 Danger Alarm Trigger Level

The Danger Alarm Trigger Level is the vibration level at the analogue output that must be exceeded for at least the Danger alarm delay time for the Danger alarm to become activated.
By default the Danger alarm trigger level is set to be 55 % of full scale in Band 1.
The customer can set the Danger alarm trigger level by using the following procedure:

- Remove the lid that covers the VIBROCONTROL 850.
- Connect a digital multi meter in DC mA mode with a full-scale deflection of at least 20 mA to the wires “GND” (-) and “4-20 mA Output” (+).
- Set DIP-switches 3, 4 & 5 in position (Off – On – Off)
- The analogue output can be changed to any value between 1 % and 100 % of full scale by pushing the buttons “On” and “Off” at the left and right bottom of the round plate. Each pushing of the button will decrease or increase the limit by 0.5 % of full scale. Stop pushing the buttons when the required Danger alarm trigger level has been reached. When one of the buttons is held down it will continuously change the Danger alarm trigger level.
- When finished put the DIP-switches 3, 4 & 5 into the position Off – Off – Off, which will bring the VIBROCONTROL 850 back into normal monitoring mode with the new settings in place.

Failing to put the DIP-switches 3, 4 & 5 in Off – Off – Off position after the setting is finished, will have the consequence that the analogue output will continuously be showing the Alert alarm delay time and the vibration guard will therefore NO LONGER react on any alarm trigger levels, i.e. neither from Alert nor Danger alarms.

3.10 Danger Alarm Delay Time

The Danger Alarm Delay Time is the minimum time the vibration level must exceed the pre-set Danger alarm trigger level before the alarm gets activated. This is to avoid false alarms in situations where an allowed short-lived shock (transient) is imposed on the machine. This could be when e.g. a new piece of raw material is placed in or taken out of the machine.
The Danger alarm delay time is 1 second.
The customer can set the Danger alarm delay time by the following procedure:

- Remove the lid that covers the VIBROCONTROL 850.
- Connect a digital multi meter in DC mA mode with a full-scale deflection of at least 20 mA to the wires “GND” (-) and “4-20 mA Output” (+).
- Set DIP-switches 3, 4 & 5 in position (Off – Off – On).
- The analogue output can be changed to any value between 0 seconds and 100 seconds by pushing the buttons “On” and “Off” at the left and right bottom of the round plate. 0 seconds is 4 mA and 100 seconds is 20 mA. Each pushing of the button will decrease or increase the Danger alarm delay time by half a second. When one of the buttons is hold down it will continuously change the Danger alarm delay time. Stop pushing the buttons when the required Danger alarm delay time has been reached.
- When finished put the DIP-switches 3, 4 & 5 into the position Off – Off – Off, which will bring the VIBROCONTROL 850 back into normal monitoring mode with the new settings in place.

Failing to put the DIP-switches 3, 4 & 5 in Off – Off – Off position after the setting is finished, will have the consequence that the analogue output will continuously be showing the Alert alarm delay time and the vibration guard will therefore NO LONGER react on any alarm trigger levels, i.e. neither from Alert nor Danger alarms.

3.11 Vibration Level During Self-Test

The vibration level, as well as the DC-current at the analogue output is by default pre-set to 102 % (of full scale) when running a Self-Test, i.e. 20 mA. The analogue output level during Self-Test value can be set to be more than 100 % (20 mA) to ensure that there will be a minimum of at least 20 mA at the analogue output whenever the Self-Test is activated.
In order to test the integrity of the VIBROCONTROL 850, it's recommended that the Self-Test is carried out either manually or automatically (by e.g. a PLC-controller) on a regular basis.
The Self-Test can be activated on the wire input or by DIP-switch.

Failing to put the DIP-switches 3, 4 & 5 in Off – Off – Off position after the setting is finished, will have the consequence that the analogue output will continuously be showing the Alert alarm delay time and the vibration guard will therefore NO LONGER react on any alarm trigger levels, i.e. neither from Alert nor Danger alarms.

Alternatively the customer can set the analogue output level during Self-Test to his/her likings by using the following procedure:

- Remove the lid that covers the VIBROCONTROL 850.
- Connect a digital multi meter in DC mA mode with a full-scale deflection of at least 20 mA to the wires “GND” (-) and “4-20 mA Output” (+).
- Set DIP-switches 3, 4 & 5 in position (On – Off – On).
- If e.g. the Self-Test level is 100 % the multi meter will show an analogue output of 20.0 mA.
- The analogue output can be changed to any value between 0 % and 110 % of full scale by pushing the buttons “Down” and “Up” at the left and right bottom of the round plate. 0 % is 4 mA, 100 % is 20 mA. The maximum is 110 % or 21.6 mA. Each pushing of the button will decrease or increase the analogue output level during self-test by 1 %. When one of the buttons is held down it will continuously change the analogue output level for the Self-Test. Stop pushing the buttons when the required Self-Test output level has been reached.
- When finished put the DIP-switches 3, 4 & 5 into the position Off – Off – Off, which will bring the VIBROCONTROL 850 back into normal monitoring mode with the new settings in place.

Failing to put the DIP-switches 3, 4 & 5 in Off – Off – Off position after the setting is finished, will have the consequence that the analogue output will continuously be showing the Alert alarm delay time and the vibration guard will therefore NO LONGER react on any alarm trigger levels, i.e. neither from Alert nor Danger alarms.

© Brüel & Kjaer Vibro ● October 2017 ● C106635002 / V01
Technical alterations reserved!

3.13 System Failure

The VIBROCONTROL 850 has an internal surveillance system, including a watchdog. This surveillance system will constantly monitor the correct functioning of the unit. As soon as an internal fault is detected, such as a transducer bias error, a processor error, or a not-passed self-test, this is considered to be a very serious situation and a system failure procedure will be activated. In general a System Failure is non-latched and therefore will end as soon as the error no longer exists.
Whenever a system failure is detected the following actions are taken:

- Danger alarm relay will be activated (break), while the alert alarm is NOT activated.
- The analogue output drops to 0 mA (and NOT 4 mA). Measurable at PLC level.
- The yellow power LED will be blinking (but is only visible if the lid is removed).

Some system failures are latched and can only be removed by either performing a complete successful Self-Test or by removing the main power from the unit during a few seconds.

3.14 Hang Time

This is the time an Alert or Danger alarm relay will remain activated even though the vibration level has decreased to below the pre-set trigger level. The hang time for these relays is set to 1 second.
When the Danger Relay act as a system failure output it has no hang time, but it will remain activated until the system failure condition has ended or reset, e.g. after a complete successful self-test or by removing the main power from the unit for a few seconds.

3.15 Latch Function

The latch feature of the VIBROCONTROL 850 ensures that the alarm relay(s) stay triggered, even though the vibration level is reduced to below the alarm trigger level for longer than the hang time. Applying a GND signal to the “/ Latch alarms” wire can latch the relays.

3.16 Overload

The VIBROCONTROL 850 is provided with an overload detection system that detects the occurrence of an overload situation, i.e., when the vibration level exceeds the maximum vibration level of the built-in accelerometers.
The overload detection system has a hang time of approximately 1 second.

The detection of an overload condition generates a system failure (NOK status).

The alert relay is inactive and the danger relay is active (system error).

The DC analogue output will move to 0 mA to indicate the overload condition as a failure. The “Power LED” is blinking (behind the lid).

3.17 Over range

The VIBROCONTROL 850 Vibration Monitor is provided with an over range detection system.

The detection of an over range will not generate a system failure (OK failure).
The status of the alarm relays is active.

The DC analogue output will move to 20,5 mA to indicate the over range condition.

3.18 DC Analogue Output

At the "4-20 mA output wire" a DC output current will be available, which is direct proportional to the vibration level. An output current of 4 mA at the DC output represents a value of 0 mm/s, while 20 mA at the output represents full scale. Any value between 0 and full scale will then be positioned directly linear between 4 mA and 20 mA at the analogue output.
Example 1: the vibration level is a known 60 mm/s with a full scale of 100 mm/s. The analogue output should show:

$$I_{out} = 4\,mA + \frac{Velocity}{Fullscale} * (16\,mA) = 4\,mA + \frac{60\,\frac{mm}{s}}{100\,\frac{mm}{s}} = 13{,}6\,mA$$

Example 2: the analogue output shows 15 mA. The velocity is:

$$Velocity = Fullscale * \left(\frac{I_{out} - 4\,mA}{16mA}\right) = 100\frac{mm}{s} * \left(\frac{15\,mA - 4\,mA}{16\,mA}\right) = 68{,}75\,mm/s$$

Please note that in order for the DC current output to function correctly it is necessary that the DIP switches 3, 4 & 5 are in the "Off – Off – Off" position.

The impedance load at the DC Analogue Output may NOT exceed 400 Ω.

3.19 Alarm Output (relays)

The VIBROCONTROL 850 is equipped with an Alert alarm relay, as well as a Danger alarm relay, each having a break mode function upon activation (= FAIL SAFE). This means that these relays are always in make mode, i.e. energized, while being in standby. This also means that the relays will be "activated" in case of an interruption of the main power to the unit.

The relays are PhotoMOS Solid State relays. Excessive current and/or voltage will destroy the relays. For this reason please do not apply any power source directly to the relay. Protect the relay with a resistor in series that will limit the current or use as drive for a power contactor.

© Brüel & Kjaer Vibro ● October 2017 ● C106635002 / V01
Technical alterations reserved!

The following conditions for the relays should not be exceeded in your application:
Insulation 30 V

- Maximum current load 100 mA
- Max load voltage 30 V
- ON resistance alert relay < 4 Ω
- ON resistance danger relay < 8 Ω
- Off state Leakage current Max 1 µA

3.20 Light Emitting Diodes (LEDs)

Three status indicating Light Emitting Diodes (LEDs) are located under the lid and the stop plug of the VIBROCONTROL 850.

- **Power** .....The yellow “Power” LED will light up whenever main power is applied .....between the wire “+24 V” and the wire “GND”. This LED also acts as a .....System Failure indicator and will start to blink if a system failure takes .....place.
- **Danger**.....The red “Danger” LED will light up as soon as the Danger alarm is .....activated
- **Test**.....The yellow “Test” LED will light up for as long as the self-test function is .....activated.

3.21 Self-Test Function

The VIBROCONTROL 850 is provided with a Self-Test function that will remain activated for as long as the “/ Self-Test” wire is connected to the “GND” wire.
The Self-Test can also be initiated by toggling the internal DIP-switch #7 from “Off” to “On”. The Self-Test will last for as long DIP-switch #7 remains in the “On” position. Please note that the function of DIP-switch #7 is disabled when DIP switch #6 is in “PC mode”.
The Self-Test checks a large number of the functions inside the VIBROCONTROL 850. If the Self-Test is not passed without flaw, the system failure function will be activated.
During the Self-Test the analogue output can be set to have a certain value. If this value exceeds any of the alarm trigger levels for at least the delay time, that particular alarm will be activated and any relay that is dedicated to that alarm with it.
Self-Test is an often-used method to remotely reset some type of activated system failure.

3.22 Sensor Test

The VIBROCONTROL 850 has a built in surveillance system, which continuously monitors the bias signal of the internal accelerometer. This bias signal is a measure for the health of the vibration transducer itself. If an error in the bias of the accelerometer has been detected the system failure function will be activated, i.e. the Danger relay is activated while the Alert relay stays inactivated. Output current will drop to 0 mA.

3.23 Measuring Direction

The measuring direction of the VIBROCONTROL 850 is in the direction of the length axis of the cylindrical enclosure with no restriction in mounting angles.

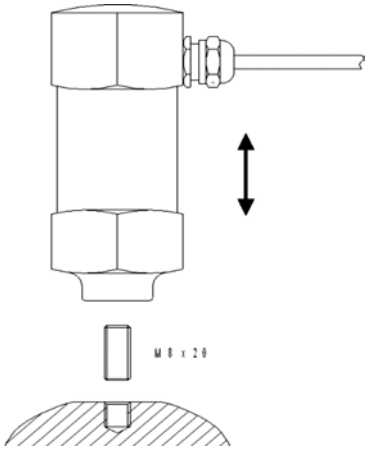

3.24 Reset of Alarms

When the vibration level is reduced below the Alarm trigger level, the Alert and Danger alarms will automatically disappear. If alarms are latched, alarms can be reset by disconnection “/ Latch Alarms” wire from “GND” for a short period.
Connection and disconnecting “/Latch alarms” wire to “GND” will reset alarms as well, however if the Alarm Trigger Level is still exceeded the alarms will reappear after the delay time.

Please note that the activation of the Danger relay as the result of a system failure can NOT be reset using the procedure described in this paragraph. Reset of a latched System Failure is generally possible by performing a complete successful Self-Test. If this does not end the system failure alarm, disconnecting the unit from the main power for a few seconds should do the task.

3.25 Inhibit Alarms

The Alert and Danger alarms and the activation of a system failure cannot be inhibited, i.e. cannot be de-activated for some time. This feature is not available in the VIBROCONTROL 850.

3.26 Grounding the housing of the device

Speed control systems of rotating machines often generate a very strong electric field interference that may cause problems with the vibration monitor. In such a case, the user can position DIPswitch #8 to “ON” and thus connect the chassis ground, i.e. the steel housing of the device to the GND potential of the supply, if the electrical wiring diagram of the device in the application allows the housing to be on GND potential.

Please consult the wiring diagram of your machine to make sure that connecting the GND ground potential to the housing (i.e. DIP-switch #8 = ON) neither jeopardizes the safety function of your device nor has the potential to damage the electronics of the device inside the housing.

© Brüel & Kjaer Vibro ● October 2017 ● C106635002 / V01
Technical alterations reserved!

4 Mounting of the VIBROCONTROL 850

When mounted at external heat or cold sources (e.g. machine parts), systems, sensors and cables can adopt dangerous temperatures, whereby burning, among other things, can occur in the event of contact. Mounted sensors must not be used as steps.

The VIBROCONTROL 850 is only sensitive to vibration in the direction parallel to the length axis of the enclosure. For proper mounting of the Vibration Guard, a smooth flat surface, free of dirt and paint of min. Ø28 with a M8 thread in the middle, should be prepared. The M8 thread must have a depth of at least 10 mm.
To prevent unintended loosening of the stud while mounted on vibrating parts such as pumps, motor mounting bolts, gear boxes, etc., it should be secured with liquid thread lock e.g.

1) LOCTITE 243: Recommended for use where disassembly with hand tools is required for servicing. Prevents loosening on vibrating parts such as pumps, motor mounting bolts, gear boxes

2) LOCTITE 270: Recommended for permanently locking studs, where regular removal fo maintenance is not required.

For use of above-mentioned products refer to their respective datasheets.

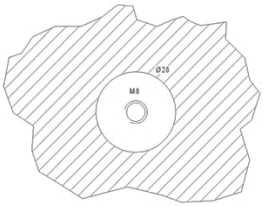

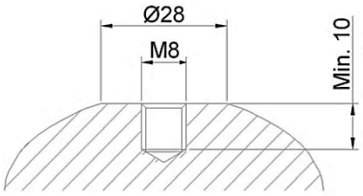

The VIBROCONTROL 850 has an enclosure with IP68 ingress protection, which means that it is suitable for outdoor use. Please be aware that if the device is exposed to direct sunlight for a long period of time that the text on the label of the standard devices might fade.

It is only allowed to engage 10 mm of the stud into the VIBROCONTROL 850.

To allow an easy installation of the VIBROCONTROL 850 please make sure that there is enough space available around the device.

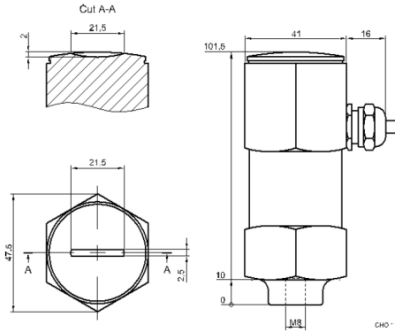

The correct functioning of the VIBROCONTROL 850 can only be guaranteed by the manufacturer if accessories designed for and delivered with or approved/certified by the manufacturer Brüel & Kjær Vibro are used together with this device.

The VIBROCONTROL 850 has no internal forced ventilation. These devices have no external ventilation requirements as long as the surface temperature during operation does not exceed the maximum ambient temperature value Ta.

If the VIBROCONTROL 850 is used in a manner not specified by the manufacturer, the protection provided by the equipment may be impaired. The safety of any machine/system incorporating the VIBROCONTROL 850 device is the sole responsibility of the assembler of the system

5 Cable Connections

The cable that is attached to the VIBROCONTROL 850 is made of PUR, i.e. an oil resistant type. It is single-shielded; it has a default length of 5 meters and has at the other end 12 open-ended wires. The meaning of each wire and their colors in the standard configuration are specified below.

5.1 Standard Cable Configuration

Colour	Function
Red	+ 24 V
Black	GND
Red / Blue	Danger, relay
White	Danger, relay
Purple	Alert relay
Blue	Alert relay
Green	Self test
Yellow	Latch alarms
Pink	4-20 mA
Grey	No Connection
Brown	No connection
Grey / Pink	No Connection
Screen	House

© Brüel & Kjaer Vibro ● October 2017 ● C106635002 / V01
Technical alterations reserved!

6 Technical data

Vibration measuring parameters:	Velocity in mm/s rms
Measuring range in mm/s	Velocity: 10 mm/s, 20 mm/s, 50 mm/s, or 100 mm/s (Selectable by DIP Switch)
Frequency range	10 Hz – 1000 Hz @ -1dB, >-18 dB/octave
Alert & Danger alarm trigger levels	Default: • Alert: 35 % of maximum measuring range • Danger: 55 % of maximum measuring range Selectable by DIP-switch: 1-100 % of the maximum measuring range
Alarm Delay	Default: Alert = 3 s & Danger = 1 s Selectable by DIP-switch: 0 – 100 s
Alarm Hang Time	1 s
Vibration Measurement accuracy	+/-5 % of reading -/+ 2 % of Full Scale setup, typical, @calibration ref: 100Hz, velocity, 25℃, with current LP and HP filter setup.
DC Output Current	4-20 mA, max load resistance 400 Ω
Alarm output	Two relays with break function: Alert and Danger. Both relays are latched. (Max 30 V, 100 mA)
Self-Test	A Self-Test can be activated by DIP switch and remotely. The Alert and Danger relays are only activated after the duration of their respective delay times if the analogue output during Self-Test is higher than the alarm trigger level
Sensor watchdog	The VIBROCONTROL 850 is equipped with an internal Watchdog that continuously checks the functioning of the sensor. At a sensor failure the Danger relay is activated, and the Alert relay stays inactivated. Output current will drop to 0 mA.
Power Failure	If the power is cut, all relays will become activated, i.e. break, thus FAIL SAFE
Measuring direction	Measuring direction axis is parallel to the length axis of the cylindrical enclosure. See drawing in paragraph 3.22

Cable	Oil resistant, PUR, screened. 12 x 0,25 mm^2 open end Standard cable length: 5 m
Enclosure material and dimensions	Material: Stainless Steel Type 1.4305 (AISI 303) Dimensions: Height: 102 mm Width max, without cable gland: 47 mm Width across hexagon 41 mm
Ingress protection	IP66/68
Temperature range	In operation: -20 °C ≤ Ta ≤ +65 °C In storage : -40 °C ≤ Ta ≤ +85 °C
Maximum relative humidity	95 % RH (non-condensing at +40 °C)
Pollution degree	3 (industrial use) and 4 (outdoor use).
Maximum altitude	In operation: 4000 m
Mounting	Internal thread M8; Depth of thread max. 10 mm Mounting torque approx. 6.8 Nm See mounting instructions in chapter 5

CE compliance	EMC Directive 2004/108/EC
Temperature	EN 60068-2-1:2007 Cold EN 60068-2-2:2007 Dry heat Operating: -20 to +65°C Storage : -40 to +85°C
Maximum Humidity	EN 60068-2-78:2001 ; 95 % RH (non-condensing at +40 °C)
Mechanical Vibration (non-operating)	EN 60068-2-6:2008 : 0.3mm, 20 m/s^2, 10-500 Hz
Mechanical Shock (non-operating)	EN 60068-2-27:1997 : 1000 g
Mechanical Bump (non-operating)	EN 60068-2-29:1997 : 1000 bumps at 250 m/s2
Enclosure	EN 60529+A1:2002 : Ingress Protection, IP68 - 1 m/24 h

© Brüel & Kjaer Vibro ● October 2017 ● C106635002 / V01
Technical alterations reserved!

7 Maintenance

The VIBROCONTROL 850 VIBROCONTROL 850 is maintenance free.

In case the VIBROCONTROL 850 needs to have removed the lid for change of settings, make sure that the O-ring is in place and not damaged.

To re-assemble the lid, please carry out point 1) and 2) in reversed order.

To clean a VIBROCONTROL 850 or VIBROCONTROL 850 device please wipe its enclosure with a moisture cloth, if necessary, with a small amount of a mild detergent. The use of any strong/aggressive detergent might cause the fading of the labels on the enclosure, making them unreadable

In the unlikely event that you experience erroneous behaviour of the device, e.g. a system failure, we advise you to carry out a complete self-test for a couple of minutes.
In case the system failure is still present after such a complete self-test we strongly recommend you to contact the manufacturer for a repair of the device.
Whenever you contact the manufacturer for a repair of the device you are kindly requested to have the following information at hand:

- The serial number of the device, visible on a label at the side of the enclosure

8 Disposal

After use, dispose of the systems, cables and sensors in an environmentally friendly manner, in accordance with the applicable national provisions.

WEEE Reg. No. DE 69572330

Manufacturer's shipping address see below:

Contact

Brüel & Kjaer Vibro GmbH
Leydheckerstrasse 10
64293 Darmstadt
Germany
Phone: +49 6151 428-0
Fax: +49 6151 428-1000

VC-850 ● C106635002 / V01 ● © Brüel & Kjaer Vibro ● Technical alterations reserved!

Brüel & Kjær Vibro

EU-Konformitätserklärung / *EU- Declaration of conformity*

Hiermit bescheinigt das Unternehmen / *The company*

Brüel & Kjær Vibro GmbH
Leydheckerstraße 10
D-64293 Darmstadt

die Konformität des Produkts / *herewith declares conformity of the product*

Einkanal-Schwingungsüberwachungsgerät / *Single channel vibration monitor*

VIBROCONTROL 850

Typ / *Type*

VC-850

mit folgenden einschlägigen Bestimmungen / *with applicable regulations below*
EU-Richtlinie / *EU-directive*

2014/30/EU EMV-Richtlinie / *EMC-Directive*

2011/65/EU Richtlinie zur Beschränkung der Verwendung bestimmter gefährlicher Stoffe in Elektro- und Elektronikgeräten/ *EU Directive for the restriction of the use of certain hazardous substances in electrical and electronic equipment*

Angewendete harmonisierte Normen / *Harmonized standards applied*

EN 61326-1: 2013
EN 50581 : 2012

Bereich / Division
Brüel & Kjær Vibro GmbH

Unterschrift / Signature
CE-Beauftragter / *CE-Coordinator*

Ort/*Place* **Darmstadt**
Datum / *Date* **13.10.2017**

i.A.
(Niels Karg)