Brüel & Kjær Vibro

Product Specifications

VC-6000 Monitoring System

Monitoring Module – SM-610-145

6x Vibration (Vector Measurements), 3x Axial Displacement, 1x Speed Channel, 8x DC Outputs, 4x Relays

The VC-6000 Monitoring System hardware is used for both stand-alone safety monitoring and condition monitoring using the Compass 6000 monitoring software modules and database. The VC-6000 offers various standard monitoring modules, power supply modules and communication modules. This Product Specification describes the SM-610-145.

Applications

The SM-610 series of VC-6000 Monitoring Modules are designed to provide protective monitoring of various types of industrial machines. The SM-610-145 is specifically designed for monitoring vibration of a machine and includes a vector, speed and axial displacement measurements.

General Description

The features and functions common to all SM-610 Monitoring Modules are briefly listed below. Please refer to the VC-6000 Product Specifications (BPS 0044) for more information.

- Interfacing with the CI-6xx Communication Modules
- High speed digital signal processor
- Relay outputs (logic controlled)
- OK-relay status indication
- Extensive local LED indication
- Flash memory for storing settings and local logbook
- High speed reaction time - 10ms
- Alarm limits with programmable hysteresis and response delay time
- Global trip multiply and override
- Extensive self-monitoring functions
- System bus interface to other modules
- Buffered vibration outputs

Inputs

- 6x vibration signals – up to 2x dual-point measurements
- 3x axial displacement signals
- 1x speed/phase reference signal
- 3x binary input signals

Outputs

- 8x analogue DC outputs
- 4x relays (2x Danger, 2x Alert):
  - 2x axial – 2-out-of-3 relay
  - 2x speed, vibration – 1-out-of-17 voting logic

Measurements

- 6x bandpass (ISO 7919 or ISO 10816)
- Up to 2x S_{max} or Max(X-Y)
- 4x vector
- 7x DC – 3x axial, 4x static shaft position
- 1x RPM

Input Channel Configuration Combinations

Monitoring Module – SM-610-145
6x Vibration (Vector Measurements), 3x Axial Displacement, 1x Speed Channel, 8x DC Outputs, 4x Relays

No. of Inputs[1]	Channel Types																	Additional Measurements			Relay's
	Dual- point Vibr.[2] (ISO)	**DC-out**	**Single-point Vibr** (ISO)	**DC-out**	**Axial Pos.**	**DC-out**	**Speed**	**DC-out**	**Rod Drop**	DC-out	**Rel. Exp.**	**DC-out**	**Eccentricity**	**DC-out**	**DC Input** (Process, Absolute Exp)	**DC-out**	**Bin. in**	**Vector**[3]	**BP**	**Tracking BP**	
10	4	2	2	2	3	3	1	1									3	4			Axial: 2x 2oo3
9/10	2[2]	1	3/ 4[2]	3	3	3	1	1									3	4			Radial: 2x 1oo17 (RPM & all module measurements)
8/10	-	-	4/ 6[2]	4	3	3	1	1									3	4			

[1] The number of input signals is the sum total of the channels shown in yellow.
[2] Dual-point measurements can alternatively be set up as single-point measurement. There is a limitation with regard to the number of DC-out's (e.g. 6 single-point vibration have only 4 DC-out available – this is not important for condition monitoring applications, however, for safety monitoring requiring DC-out for the primary measurements it is important to know).
[3] The vector values (1n, 2n, Jn, Kn magnitude and phase, residual values, and overall RMS) are for condition monitoring purposes only.

[1] The number of input signals is the sum total of the channels shown in yellow.
[2] Dual-point measurements can alternatively be set up as single-point measurement.
[3] The vector values (1n, 2n, Jn, Kn magnitude and phase, residual values, and overall RMS) are for condition monitoring purposes only.

Signal Flow Diagrams

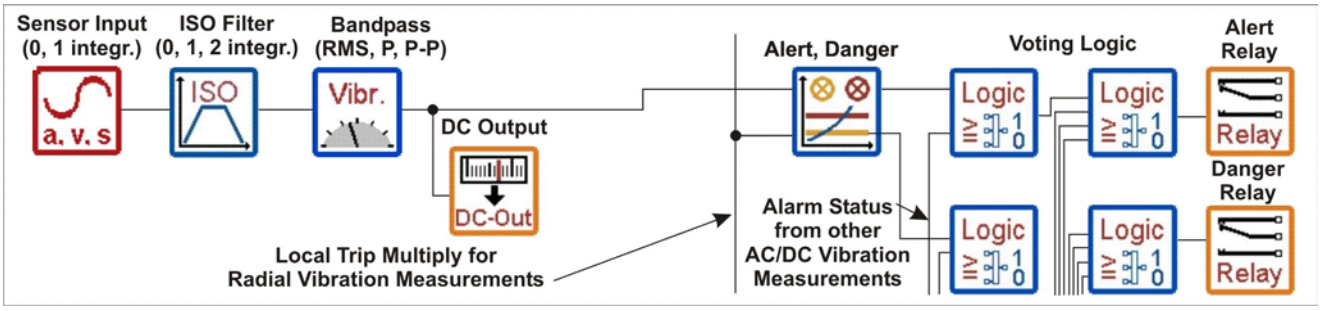

Figure 1. Single-point AC/DC vibration input (2 channels). Separate 1-out-of-17 voting logic is used for all speed and vibration measurements for Alert and Danger alarm control.

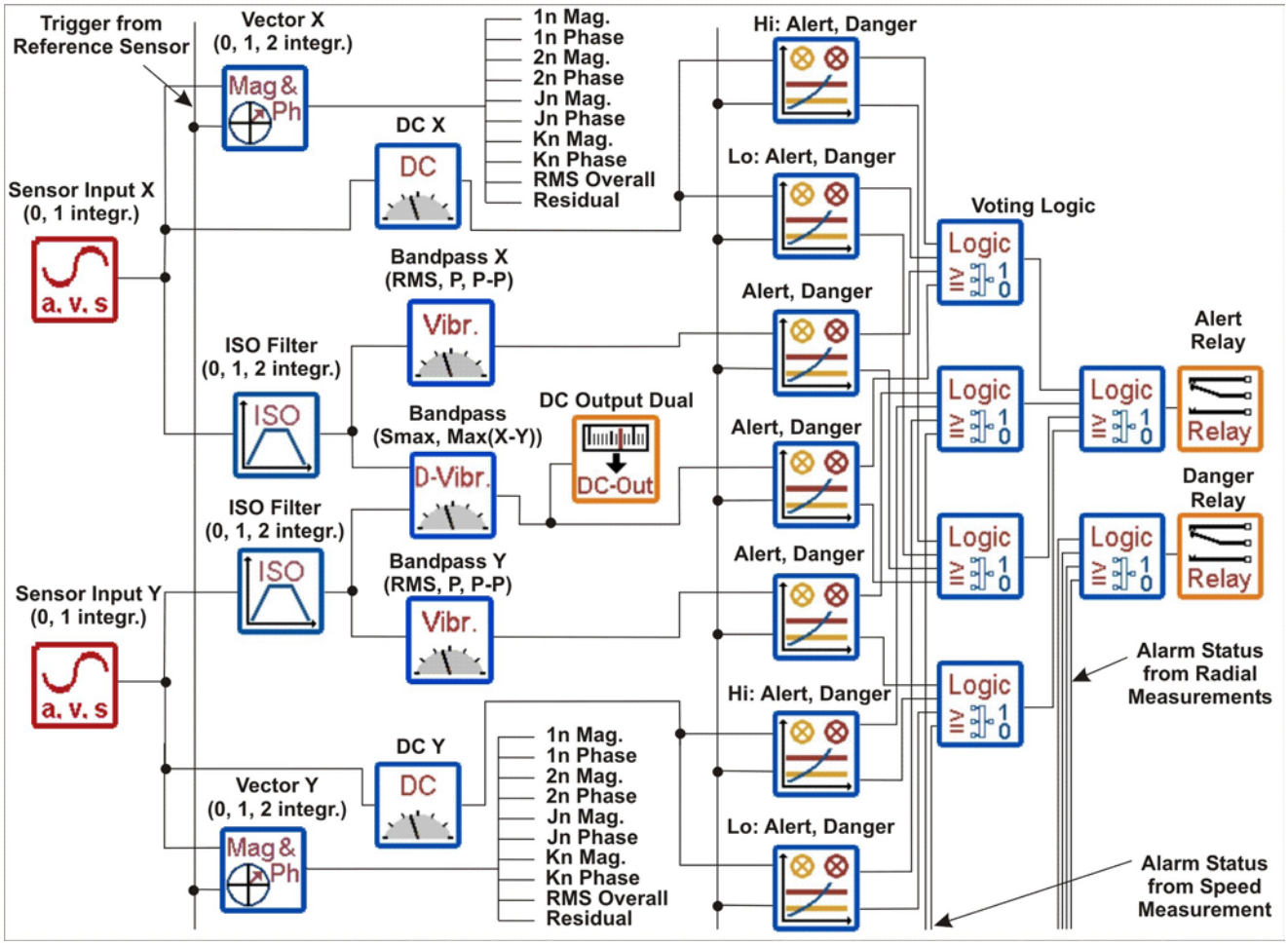

Figure 2. Dual-point AC/DC vibration input (up to 4 channels – 2 pairs). Separate 1-out-of-17 voting logic is used for speed and all vibration measurements for Alert and Danger alarm control.

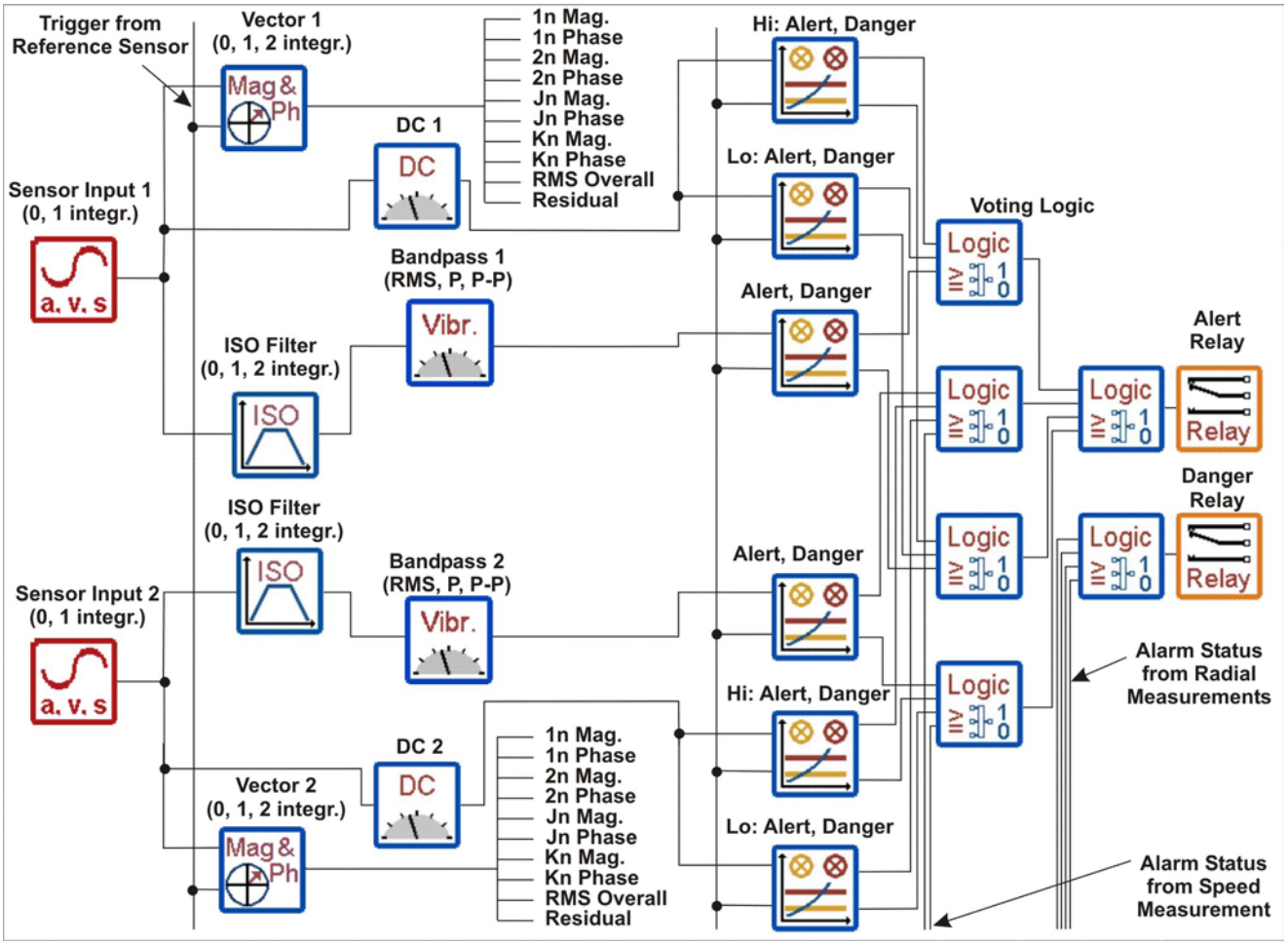

Figure 3. Two single-point AC/DC vibration inputs can alternatively be set up from a dual-point input (Figure 2). Up to 4 channels. Separate 1-out-of-17 voting logic is used for all speed and vibration measurements for Alert and Danger alarm control.

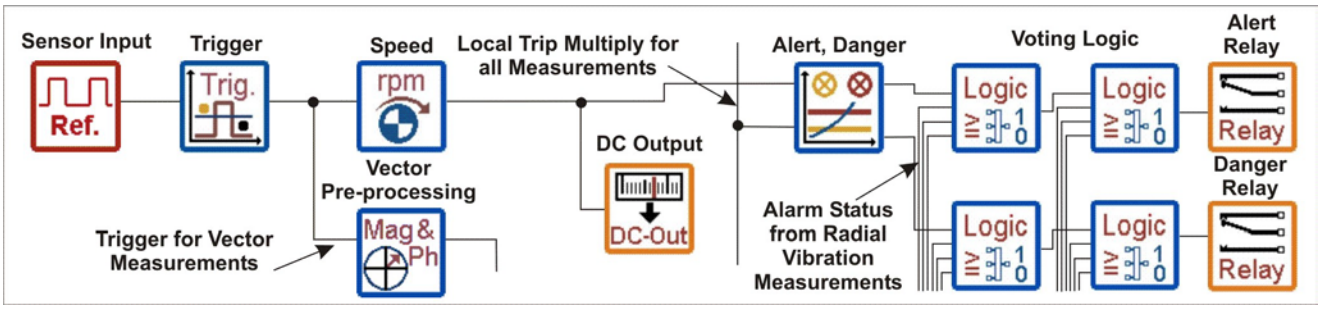

Figure 4. Speed/phase reference sensor input (1 channel). Separate 1-out-of-17 voting logic is used for speed and all vibration measurements for Alert and Danger alarm control.

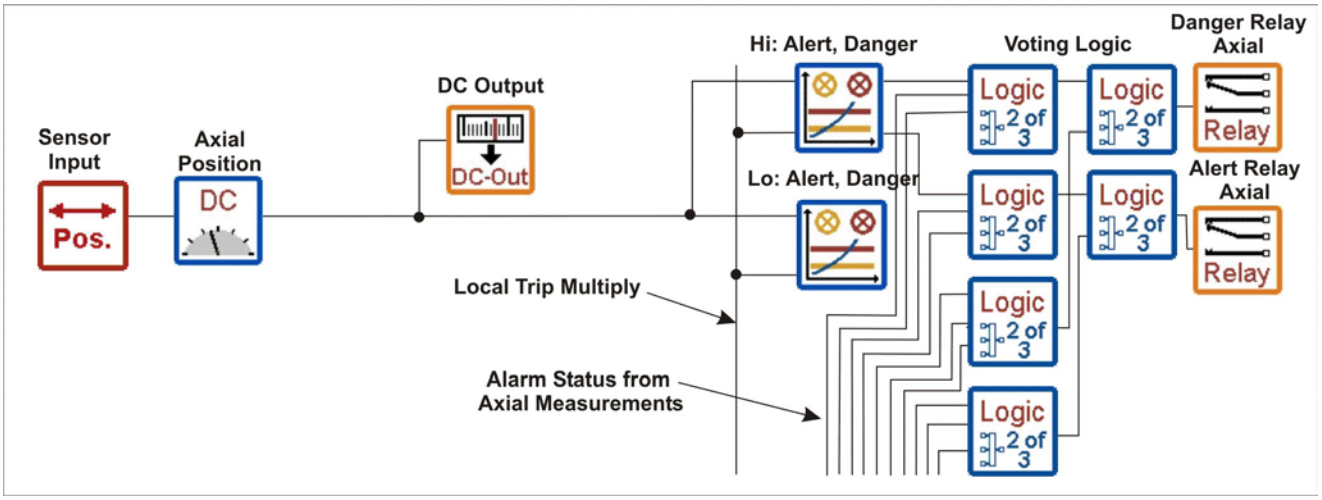

Figure 5. Axial displacement inputs (3 channels). Separate 2-out-of-3 voting logic is used for all axial measurements for Alert and Danger alarm control.

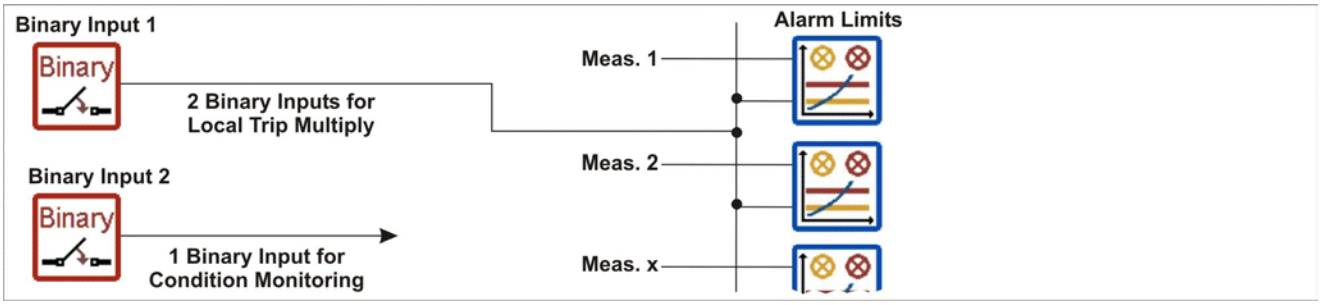

Figure 6. Binary input (3 channels – 1x for local trip multiply of axial measurement alarm limits, 1x for local trip multiply of radial measurement alarm limits, 1x for condition monitoring purposes).

Technical Specifications

The specifications given below are specific for the SM-610-145 Monitoring Module. See the VC-6000 Product Specifications for features and functions common to all SM-610 Monitoring modules.

AC/DC Vibration Sensor Inputs

Input voltage range ..... –21.5 to –1V

Input frequency range:
- Accelerometer/velocity sensor.....0.6Hz to 20kHz
- Displacement sensor ..... DC to 20kHz

Input impedance:
- Accelerometer.....>800kΩ
- Velocity sensor 50kΩ
- Displacement sensor .....>800kΩ

Gain:
- Accelerometer:
  - No integration .....1 to 80 (±0.75%)
  - Analogue integration.....1 to 80 (±2.75%)
- Velocity sensor .....1 to 80 (±0.75%)
- Displacement sensor .....1 (±0.75%)

Sensitivity:
- Accelerometer.....adjustable (typ. 100 or 10mV/g)
- Velocity sensor . adjustable (typically 100mV/mm/s)
- Displacement sensor ..... adjustable (typ. 8mV/μm)

Common mode rejection:
- DC to 30kHz ..... typically 90dB
- 30kHz to 100kHz ..... typically 85dB

Maximum accelerometer input signal (100mV/g):
- No integration ..... 1.25 to 80g peak
- Analogue integration..... 12.5 to 150mm/s peak

Sensor power:
- Sensor supply ..... –24VDC ±2%
- Maximum current.....30mA

Speed/Phase Reference Sensor Inputs

Input voltage range .....–21.5 to –1V
Input frequency range.....DC to 20kHz
Input impedance .....>800kΩ
Gain .....1 (±0.75%)

Common mode rejection:
- DC to 10kHz ..... typically 90dB
- 10kHz to 100kHz ..... typically 85dB

Sensor power:
- Sensor supply ..... –24VDC ±2%
- Maximum current.....30mA

Binary Inputs

Input impedance 3.3kΩ
Response time 5ms
Minimum current load 5mA
Maximum contact voltage .....±50V

Signal status LOW:
- Nominal input voltage 0V
- Input voltage range .....–50 to 6.6V
- Maximum input current 2mA

Signal status HIGH:
- Nominal input voltage 24V
- Input voltage range .....16.5 to 50V
- Maximum input current 5mA

Buffered Outputs

Minimum output load 100kΩ
Output gain .....1 (±2%)
Cross-talk..... typically –90dB (up to 50kHz)
Inherent noise (1Hz to 50kHz) ..... typically 10mV RMS
Output impedance ..... <100Ω
Frequency range..... DC to 50kHz (phase shift <5%)
Output offset .....≤ ±13mV

Analogue DC Outputs

Current output:
- Current range..... 4 to 20mA or 0 to 20mA
- Maximum output load 500Ω
- Accuracy ..... <2.4% of measured value
- Offset .....<20μA

Voltage output:
- Voltage range ..... 0 to 10V or 2 to 10V
- Minimum output load 1kΩ
- Accuracy ..... <1.3% of measured value
- Offset .....<9.5mV

Relay Outputs

Nominal working voltage.....24V
Maximum current 100mA

Measurements

Meas. Name	**Frequency Range**	**Measuring Time**	**Detection**	**Alarm Limits**	**Measuring Range**	**Units**[1]	**Accuracy** (25°C, 80Hz, 0-Peak)
Bandpass (ISO 10816)	HP: 1 to 10Hz (-1dB) LP: 1kHz (-1dB) 18dB/Octave (ISO 2954)	Adjustable 100ms to 100s in steps of 100ms	RMS, Peak, Peak-peak	1x Alert, 1x Danger	80g 150mm/s (1 integration[2])	g mm/s	±(0.08g + 0.75% of measured value) ±(0.6mm/s + 2.75% of measured value)
					100mm/s	mm/s	±(0.1mm/s + 0.75% of measured value)
Bandpass (ISO 7919)	HP: 1 to 10Hz (-1dB) LP: 1kHz (-1dB) 18dB/Octave (ISO 2954)	Adjustable 100ms to 100s in steps of 100ms	RMS, Peak, Peak-peak	1x Alert, 1x Danger	2000µm	µm	±(10.0µm + 1.0% of measured value)
S_{max}	HP: 1 to 10Hz (-1dB) LP: 1kHz (-1dB) 18dB/Octave (ISO 2954)	Adjustable 100ms to 100s in steps of 100ms	Peak	1x Alert, 1x Danger	2000µm	µm	±(10.0µm + 1.0% of measured value)
$X\text{-}Y_{max}$	HP: 1 to 10Hz (-1dB) LP: 1kHz (-1dB) 18dB/Octave (ISO 2954)	Adjustable 100ms to 100s in steps of 100ms	RMS, Peak, Peak-peak	1x Alert, 1x Danger	80g 150mm/s (1 integration[3])	g mm/s	±(0.08g + 0.75% of measured value) ±(0.6mm/s + 2.75% of measured value)
					100mm/s	mm/s	±(0.1mm/s + 0.75% of measured value)
					2000µm	µm	±(10.0µm + 1.0% of measured value)
DC (static shaft position)	-	Adjustable 10ms to 100s	-	2x Alert, 2x Danger	2mm	µm	±(2.0µm + 1.0% of measured value)
DC (axial)	-	Adjustable 10ms to 100s	-	2x Alert, 2x Danger	2000µm	µm	±(10.0µm + 1.0% of measured value)
Vector (1n, 2n, Jn, Kn, RMS overall and Residual value)	Fundamental: 0.33Hz-1kHz Bandwidth: 22%, 11%, 6%, 3% Upper freq.: 5kHz	Computed from bandwidth	RMS, Peak, Peak-peak	None	Jn: 0.5n to 20n Kn: 4n to 20n	g, mm/s, µm [4]	Magnitude: <1% + 0.2% of measured value
							Phase 10 to 200Hz: <2°
							Phase 5 to 500Hz: <4°
RPM	Signal slope: +/- Trigger level [5] (manual or automatic): -21.5 to -1V; adjustable in steps of 0.1V Hysteresis: 0 to 25; adjustable in steps of 0.1	Adjustable 10ms to 100s	RPM	1x Alert, 1x Danger	0.06 to > 1200000 RPM RPM multiplier and divider adjustable from 1 to 99999	RPM	Speed >10000rpm: ±0.01% of measured value Speed 100 to10000 rpm: ±1 rpm Speed < 100 rpm: ±0.1 rpm (one pulse per revolution)

[1] Metric and imperial units can be used; Metric units are shown only as an example.

[2] One analogue integration is possible. An additional digital integration can be done but this will result in less accuracy.

[3] One analogue integration is possible.

[4] One analogue integration is possible. An additional digital integration can be done without loss of accuracy.

[5] Please refer to the sensor input for the allowed input signal.

Brüel & Kjær Vibro reserves the right to change specifications without notice

Brüel & Kjær Vibro A/S
2850 Nærum – Denmark
Tel.: +45 7741 2500
Fax: +45 4580 2937
E-mail: info@bkvibro.com

Brüel & Kjær Vibro GmbH
64293 Darmstadt – Germany
Tel.: +49 (0) 6151 428 1100
Fax: +49 (0) 6151 428 1200
E-mail: info@bkvibro.de